MODEL: **WBED-D-S1-107**
Version 1.0

KING SINGLE BED FRAME

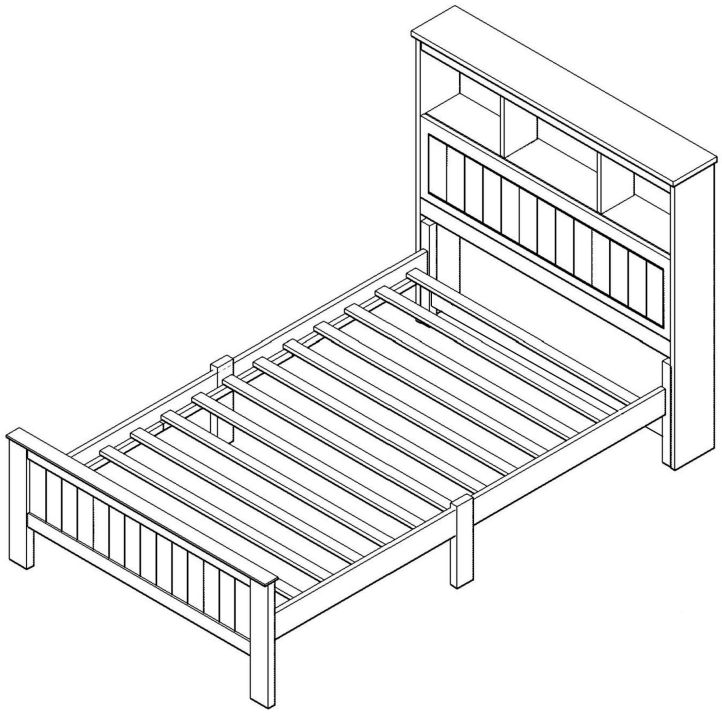

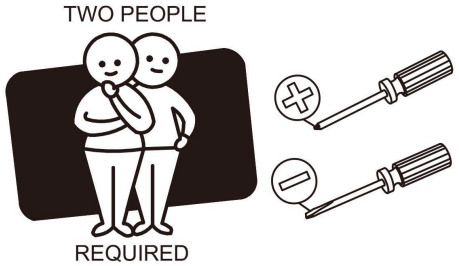

Assembly checklist

Read through the instructions carefully before you begin.

Make sure you have all the required tools. Do not use power tools.

Identify and lay out all of the components before you begin assembly.

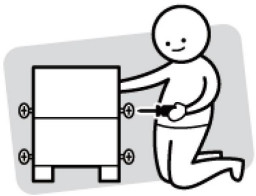

Do not fully tighten all screws until step/ precess finished.

Useful Information

! Never use power tools, they can damage your components or hardware if used incorrectly.

! The most common mistakes made during assembly are using the wrong hardware or getting components back to front.

! Always use a soft surface (such as carpet or cardboard) when assembling your product to avoid scratching or damaging the surface of the product.

! Never use any glue until you are certain that the parts belong together.

PARTS

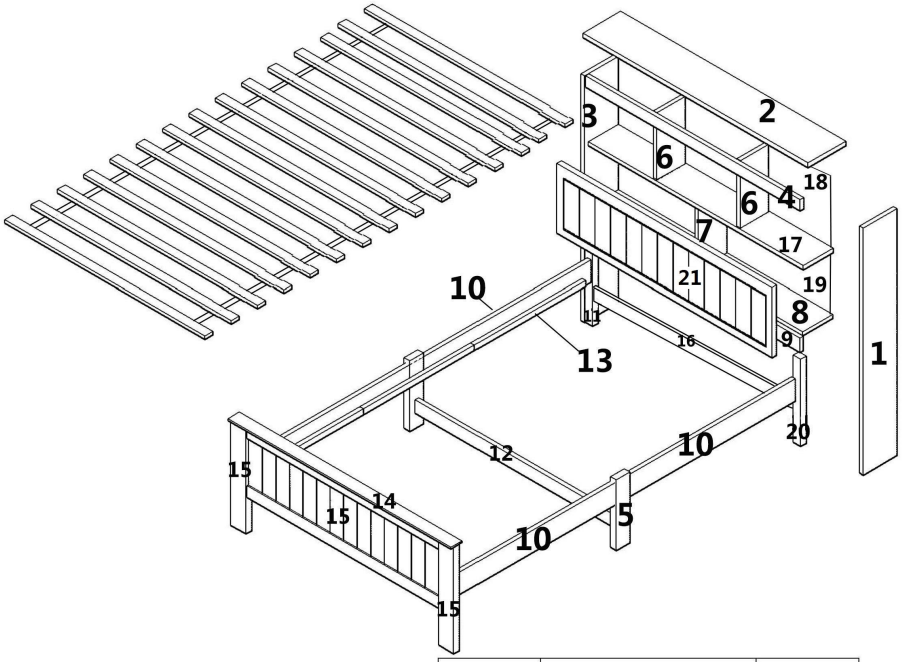

A	15mm Ø6x80mm	8
B		12
C	Ø8x30mm	34
D		2
E		4
F		4
N	15mm Ø6x100mm	2
O	O1 O2	13
R		2

G		4
H	M7*60mm	12
I		1
J		1
K	8mm Ø4x30mm	71
L	15mm	10
M	15mm Ø6x70mm	2
P		1
Q	Ø3.5x16mm	16
S	15mm	12

1

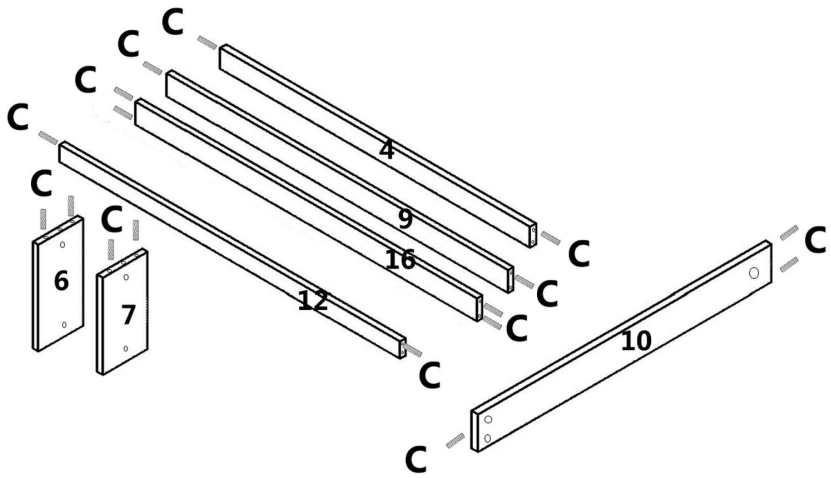

2

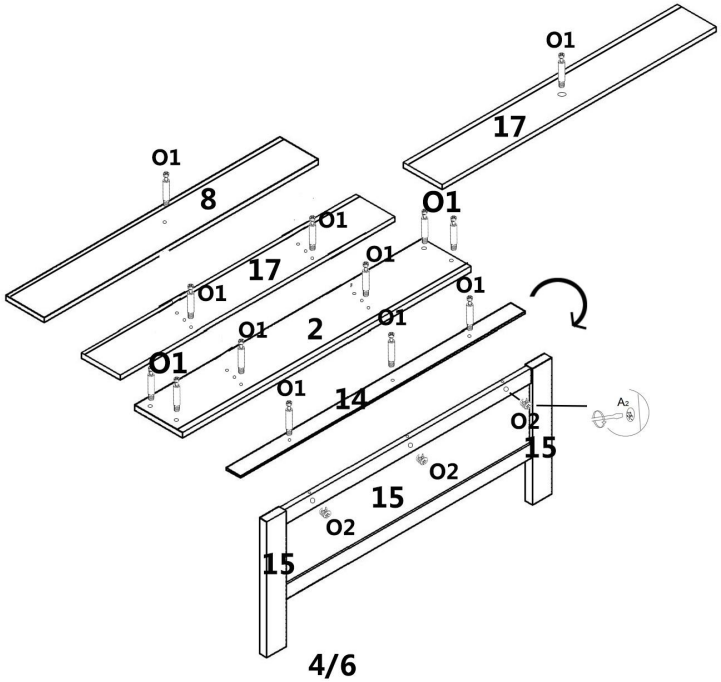

03

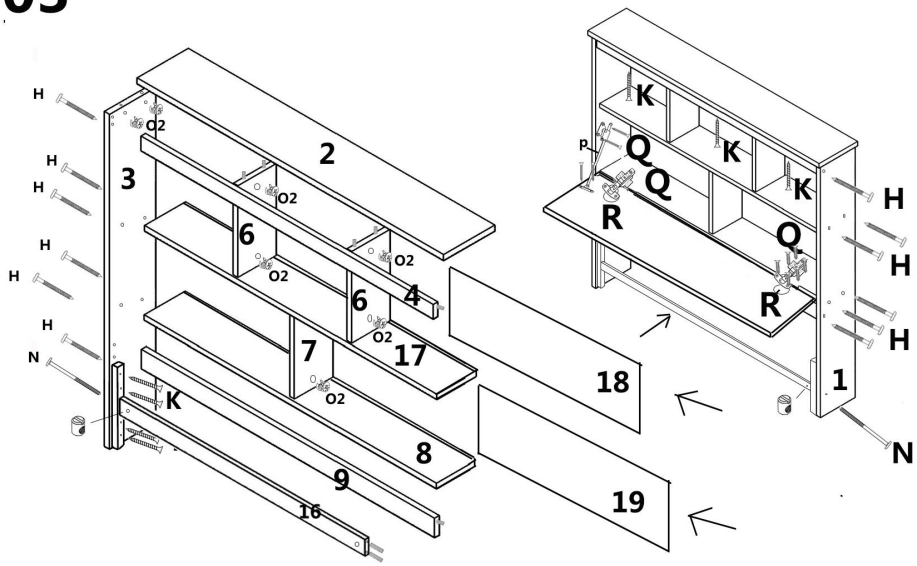

04

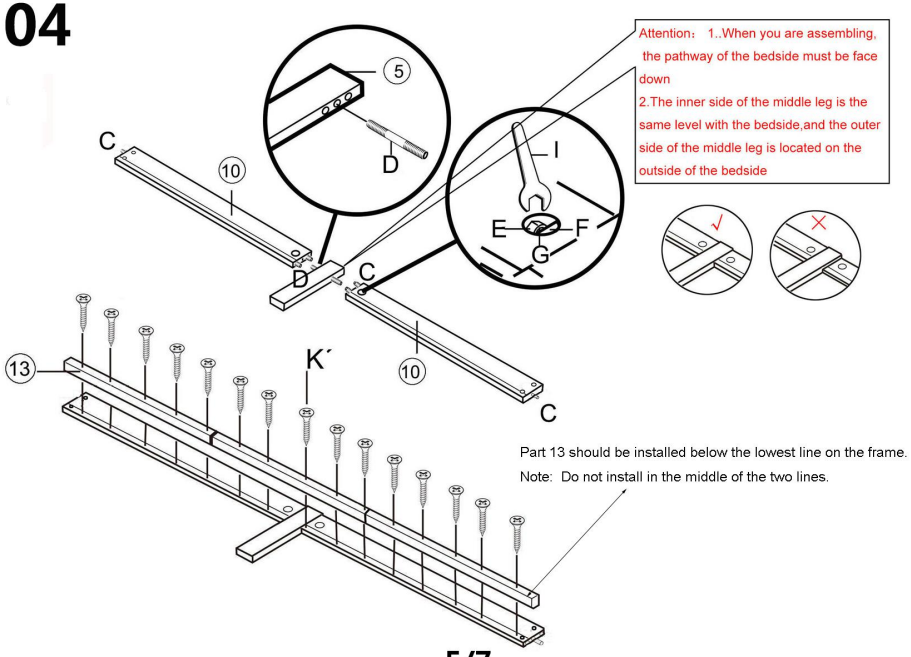

Attention： 1..When you are assembling, the pathway of the bedside must be face down
2.The inner side of the middle leg is the same level with the bedside,and the outer side of the middle leg is located on the outside of the bedside

Part 13 should be installed below the lowest line on the frame.
Note: Do not install in the middle of the two lines.

05

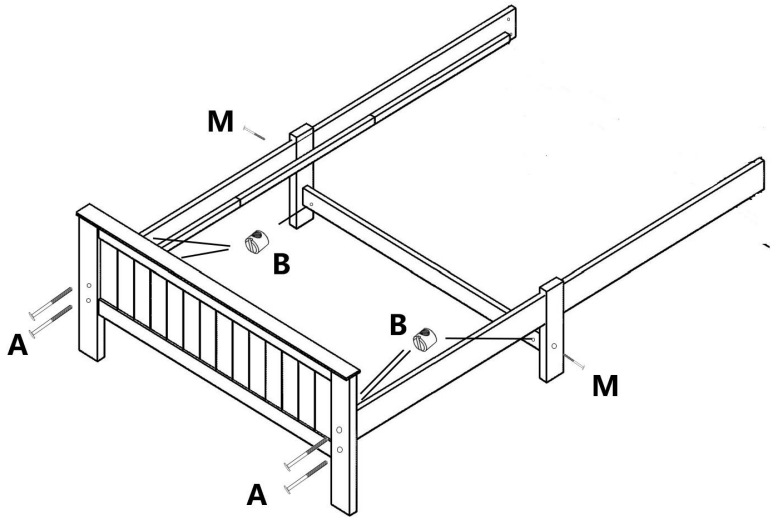
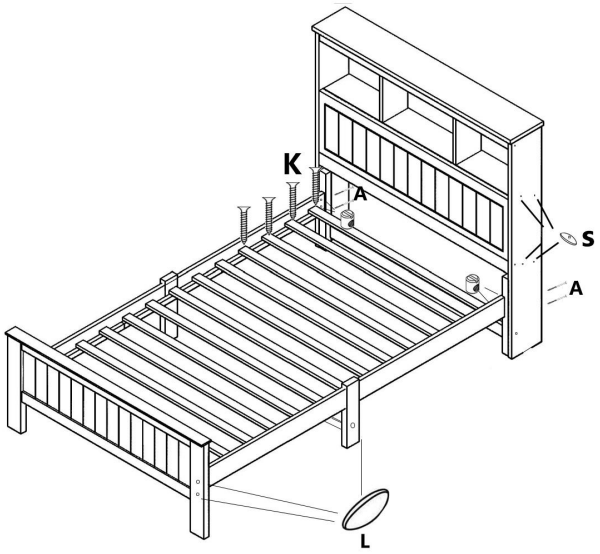
06