ASSEMBLY INSTRUCTION

Model :OTM-L140-AB/OTM-L140-LEA-BK-AB
Thank you for purchasing Artiss Storage Ottoman bench. Please indentify all parts and hardware before start assembling.
Do not discard of packaging until you have checked that you have all the parts and hardware required.
NEED HELP ? For help with assembly or if you are missing a part, please contact customer service from online retailer that you made the purchase from.

PART LIST

NO	DESCRIPTION	QTY
A	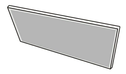	1PC
B		1PC
C	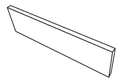	1PC
D		1PC
E	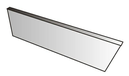	1PC
F	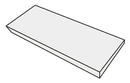	1PC

HARDWARE LIST

NO	DESCRIPTION	QTY
G1	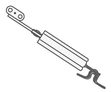	1PC
G2	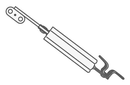	1PC
H		1PC
I	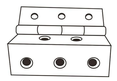	3PCS
J		32PCS
K		14PCS
L		14PCS

STEP 1

Please detach the cloth base of Part E to locate assemble accessories kit.
After taken out, you can attach the base back on.

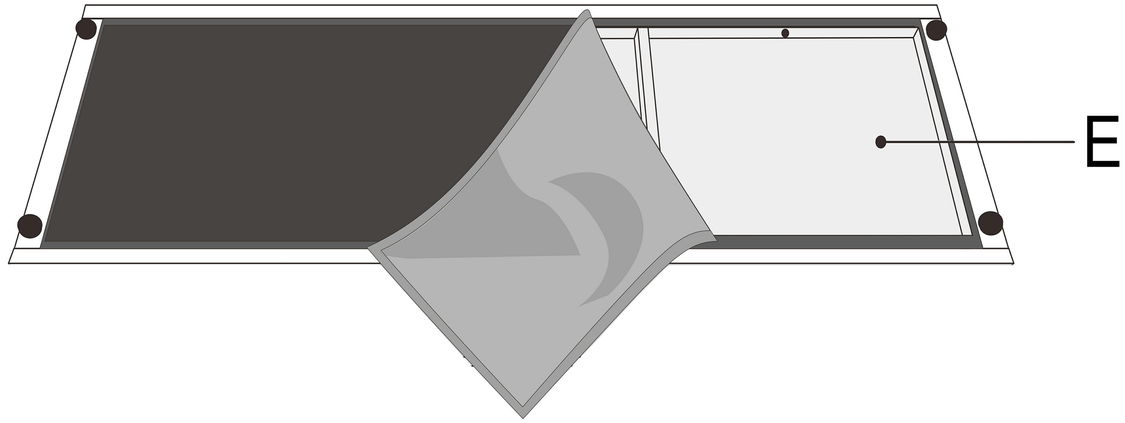

Please make sure all boards are standing up,Like the arrow show

STEP 2

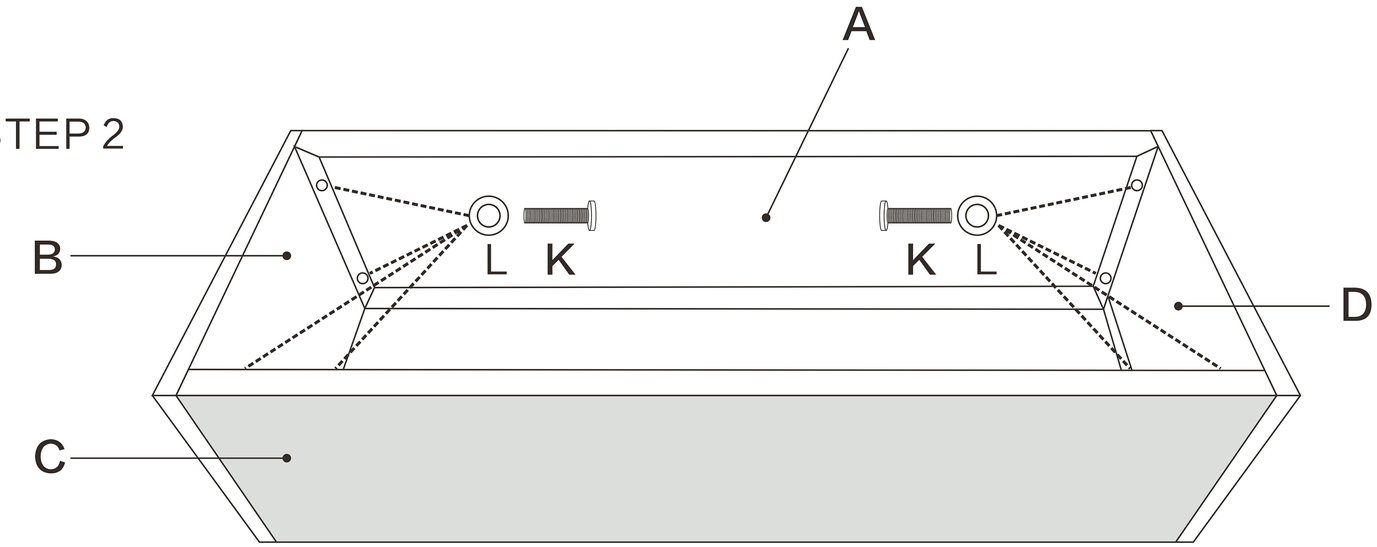

ARTISS

ASSEMBLY INSTRUCTION

STEP 3

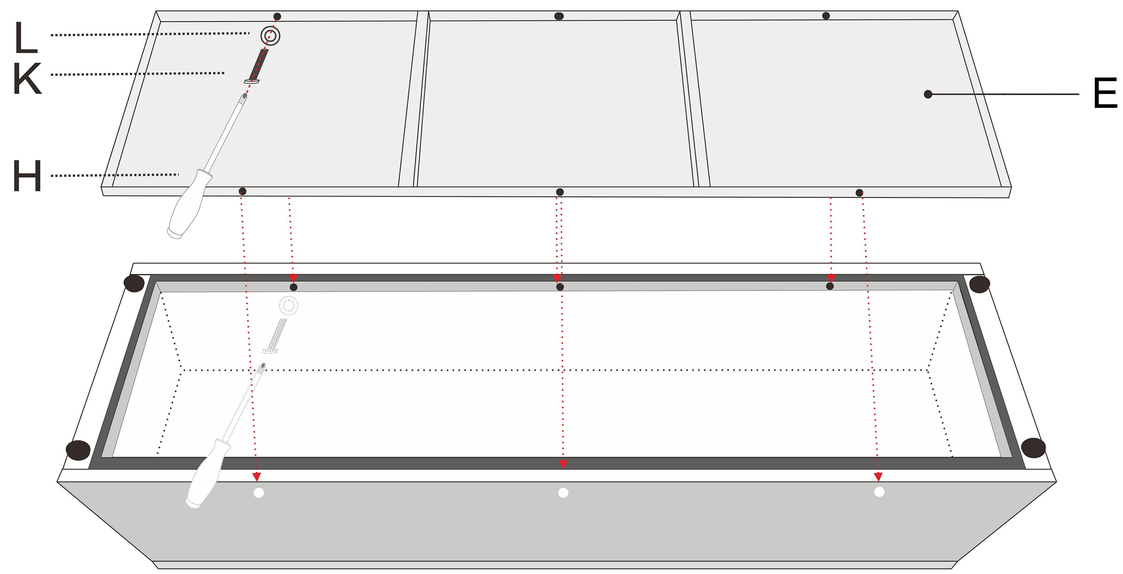

STEP 4

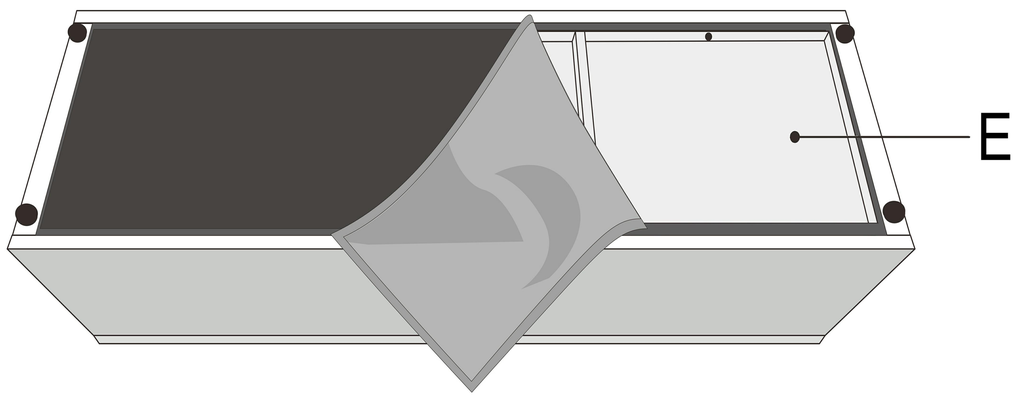

STEP 5

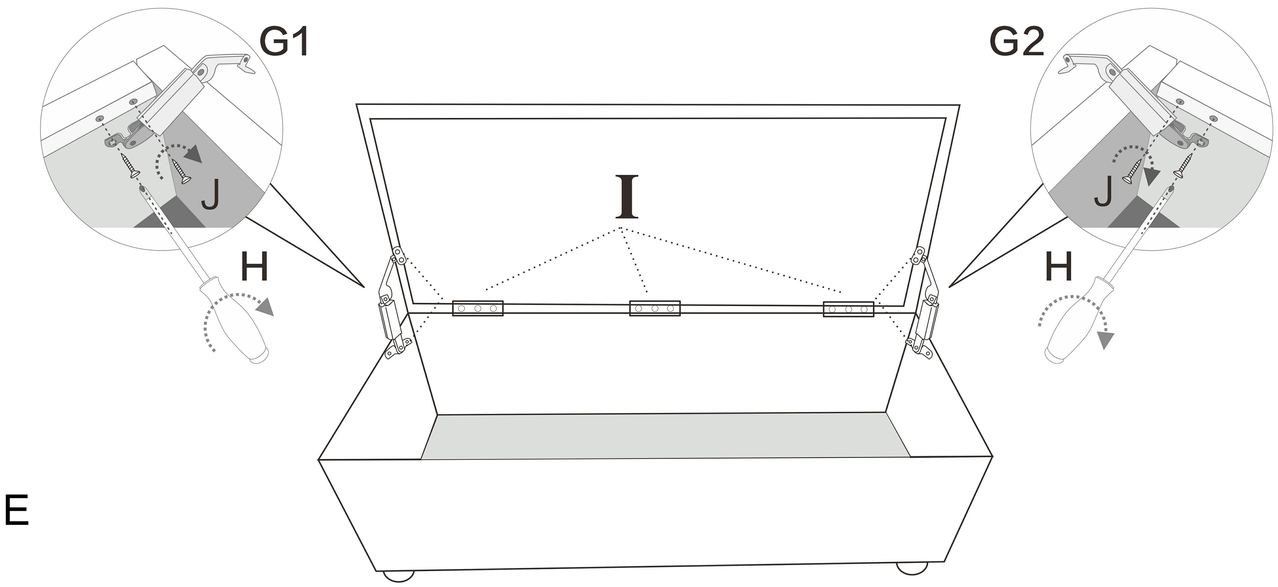
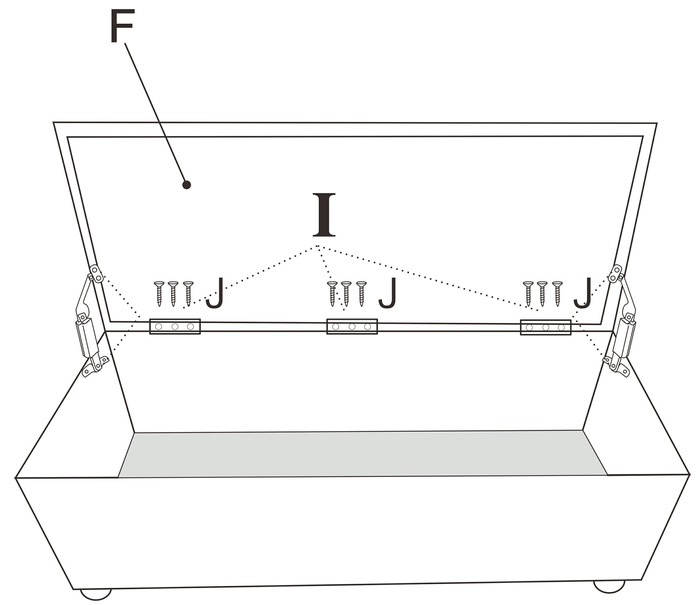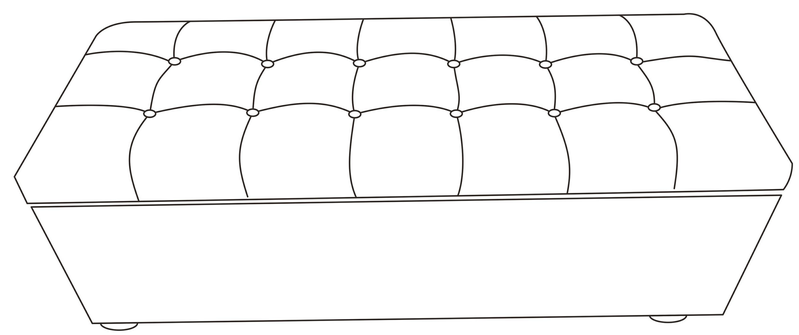
STEP 6